28M Models
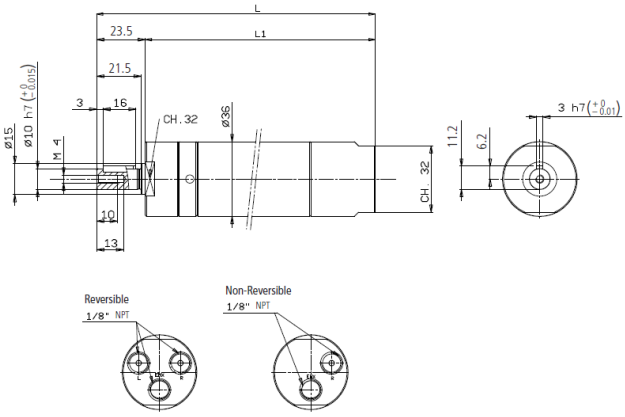
Model Number	L	L1
28M1700D-D10	134.5	111
28M600D-D10	134.5	111
28M480D-D10	134.5	111
28M330D-D10	134.5	111
28M265D-D10	134.5	111
28M155D-D10	165.5	142
28M120D-D10	165.5	142
28M100D-D10	165.5	142
28M55D-D10	165.5	142
28M1300R-D10	134.5	111
28M415R-D10	134.5	111
28M345R-D10	134.5	111
28M235R-D10	134.5	111
28M190R-D10	134.5	111
28M110R-D10	165.5	142
28M90R-D10	165.5	142
28M70R-D10	165.5	142
28M40R-D10	165.5	142